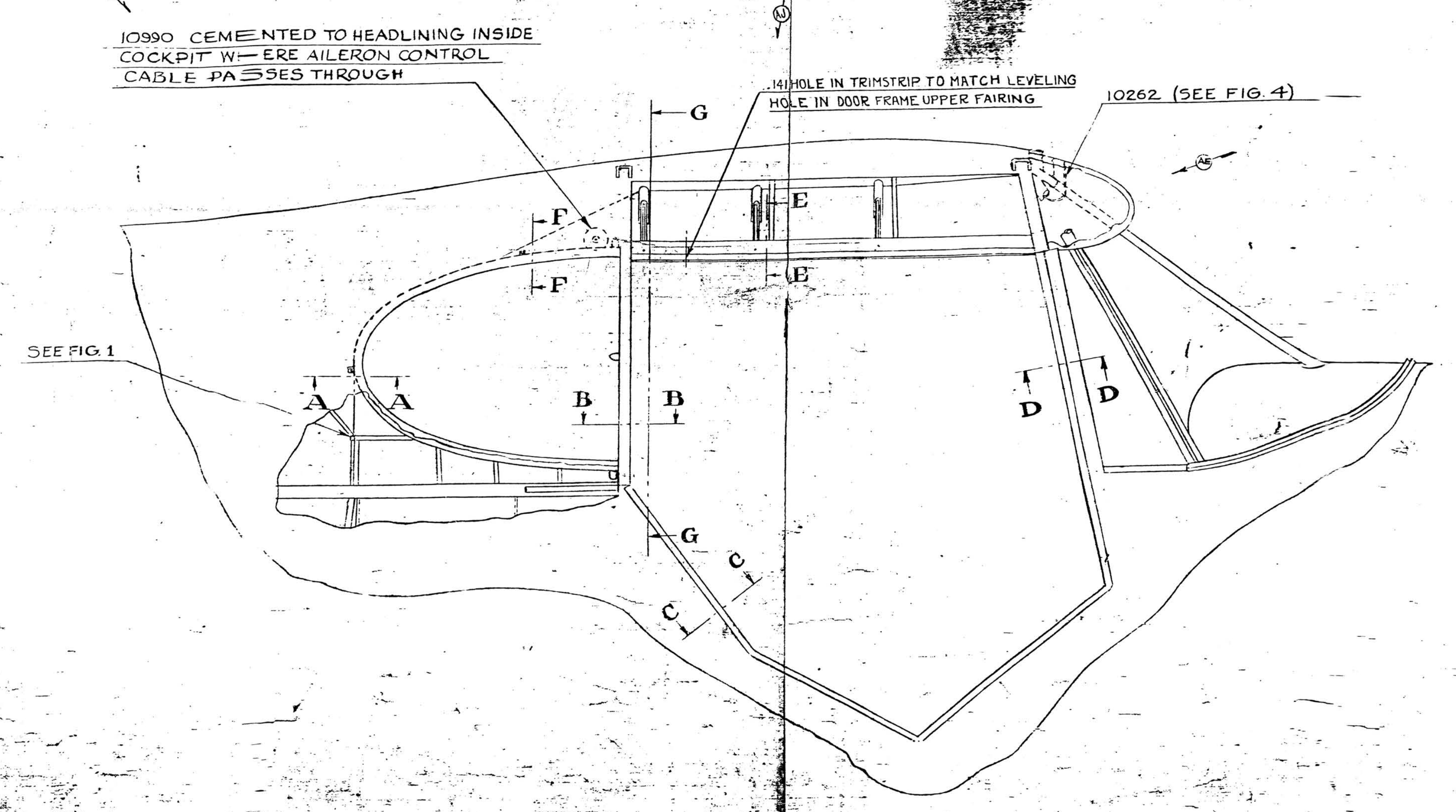
10990 CEMENTED TO HEADLINING INSIDE COCKPIT WHERE AILERON CONTROL CABLE PASSES THROUGH
.141 HOLE IN TRIMSTRIP TO MATCH LEVELING HOLE IN DOOR FRAME UPPER FAIRING
10262 (SEE FIG. 4)
SEE FIG. 1
G
G
E
E
F
F
A
A
B
B
C
C
D
D

FRONT OF AIRPLANE

RIGHT SIDE AT DOOR OPENING

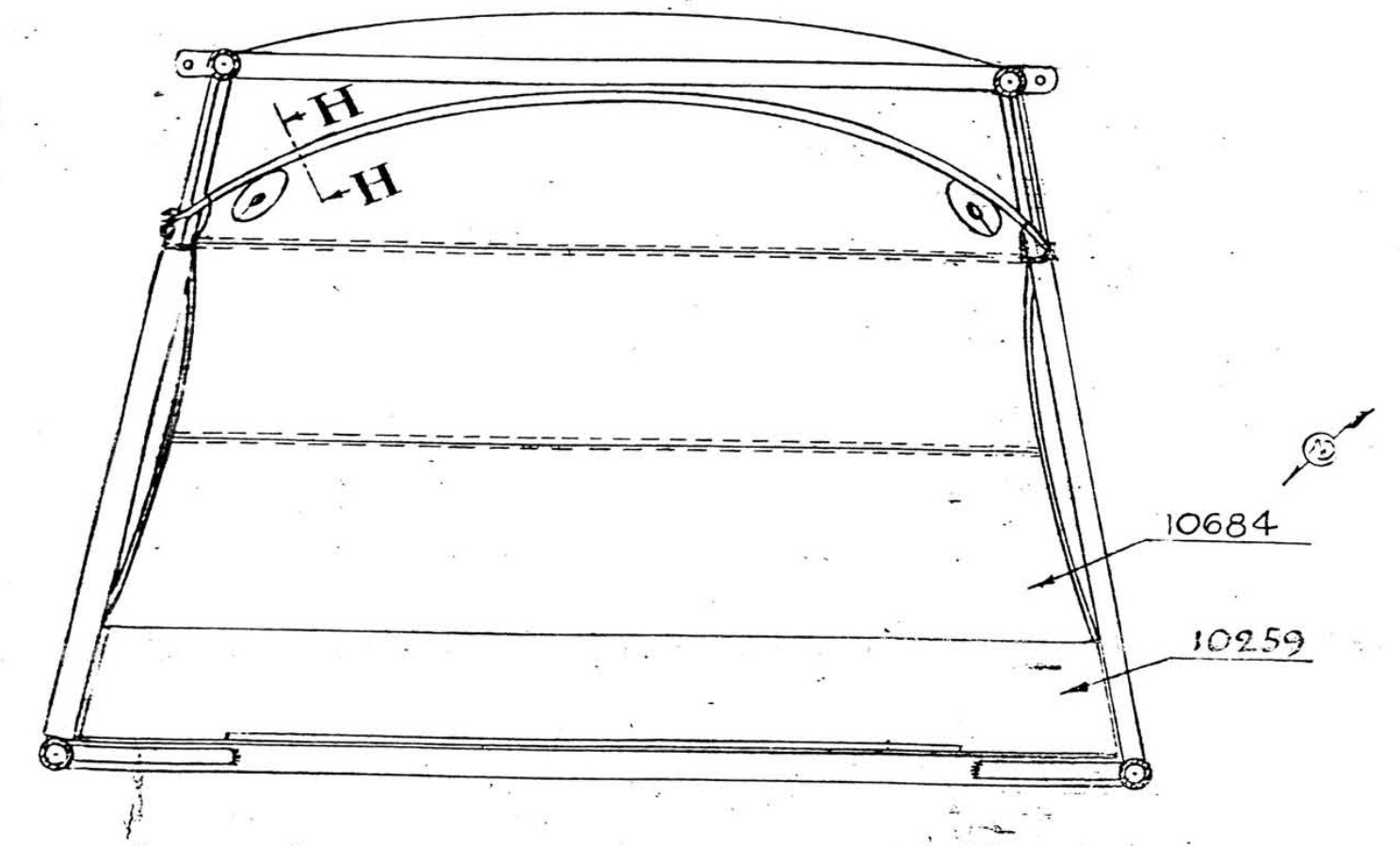
H
H
10684
10259

SECTION G-G

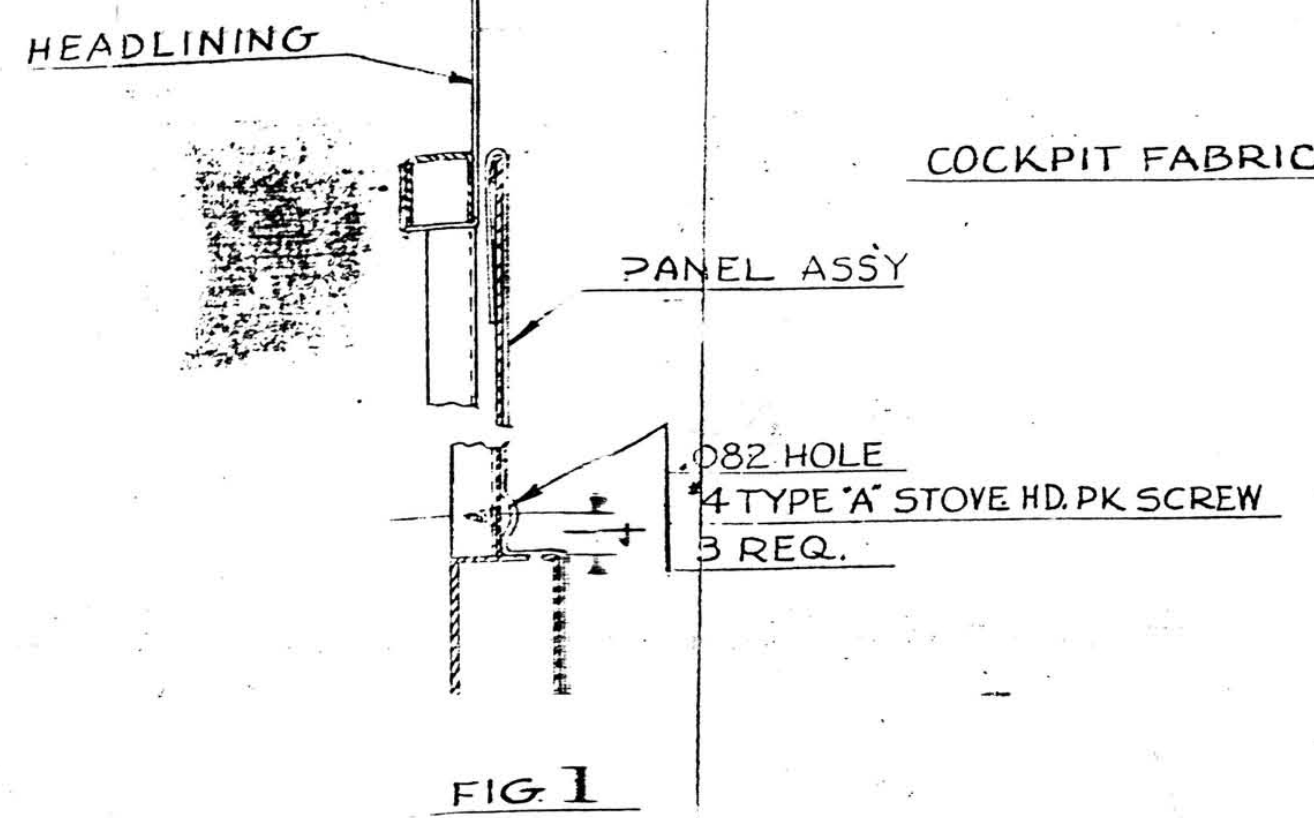
HEADLINING
PANEL ASSY
.082 HOLE
#4 TYPE "A" STOVE HD. PK SCREW
3 REQ.

FIG 1
FULL SIZE

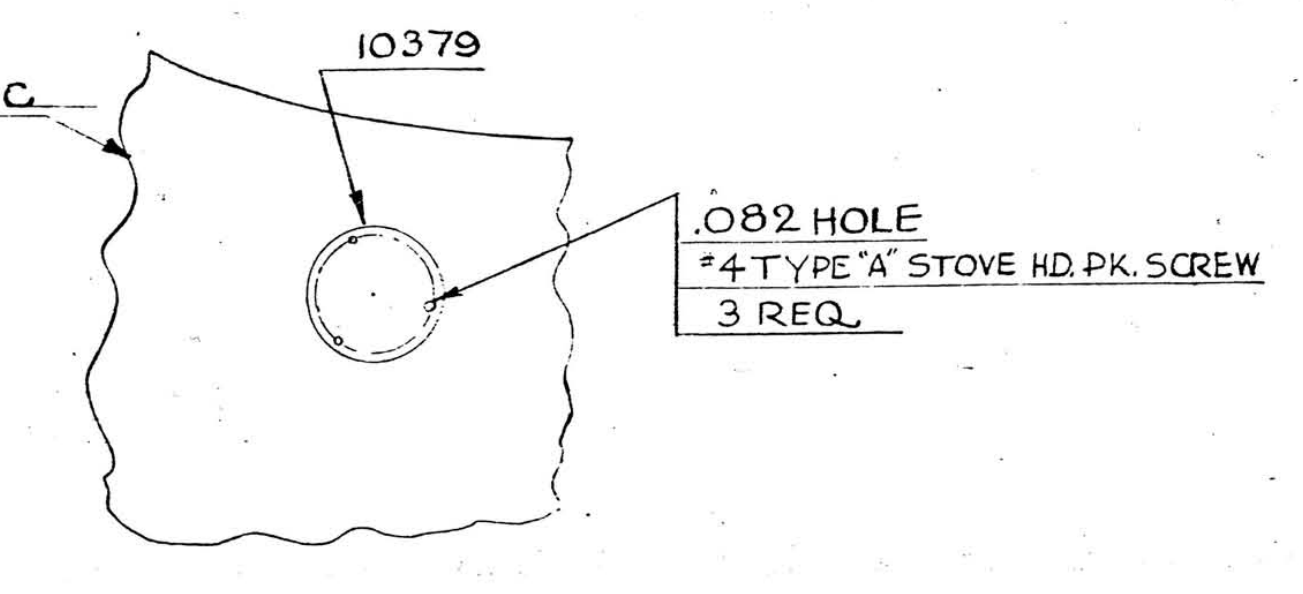
COCKPIT FABRIC
10379
.082 HOLE
#4 TYPE "A" STOVE HD. PK. SCREW
3 REQ.

FIG. 2
COVER INSTALLATION

FRONT OF AIRPLANE

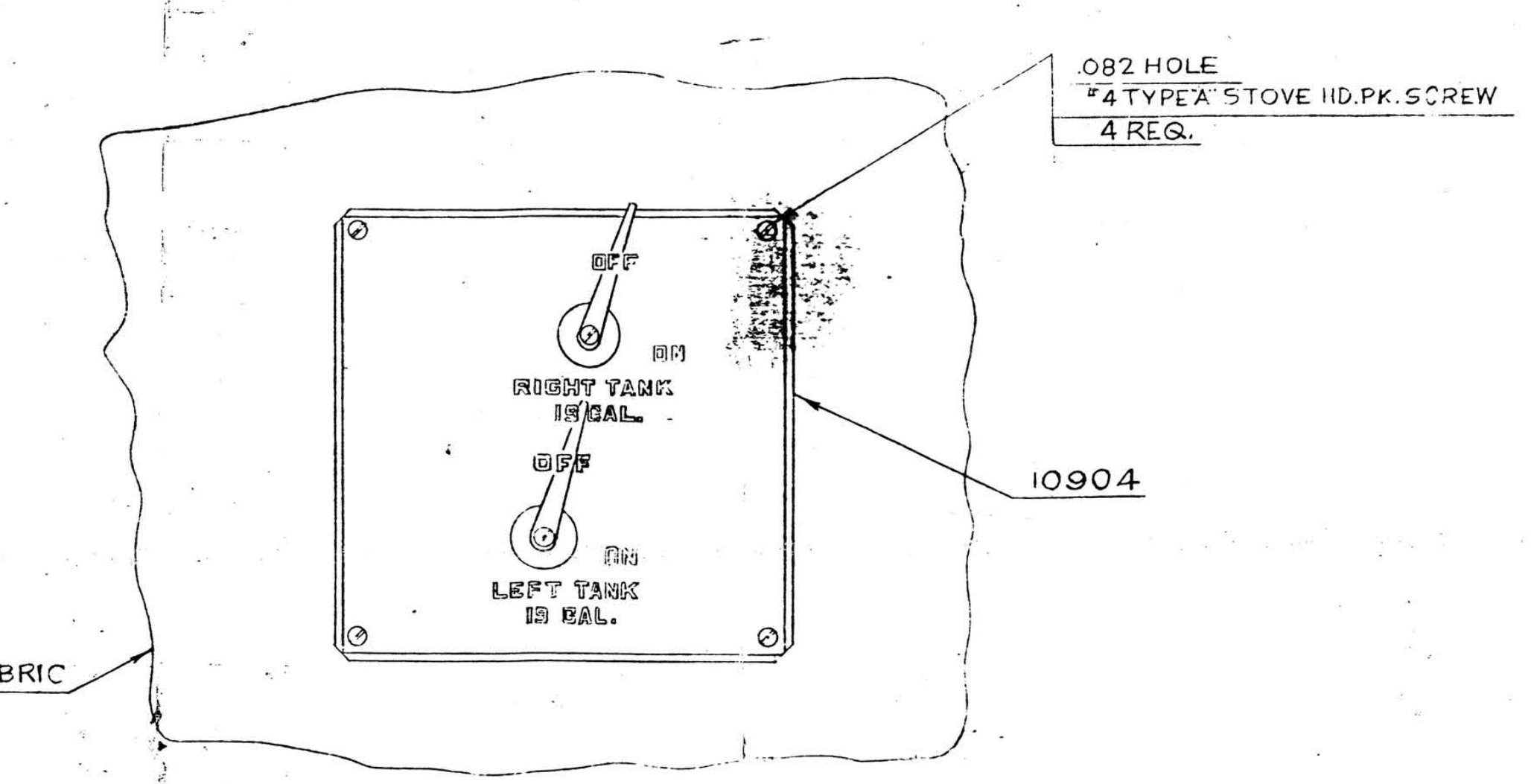
.082 HOLE
#4 TYPE "A" STOVE HD. PK. SCREW
4 REQ.
OFF
ON
RIGHT TANK
19 GAL.
OFF
ON
LEFT TANK
19 GAL.
10904
COCKPIT FABRIC

FIG. 3
INTERIOR OF COCKPIT
LEFT SIDE
6 IN. = 1 FT.

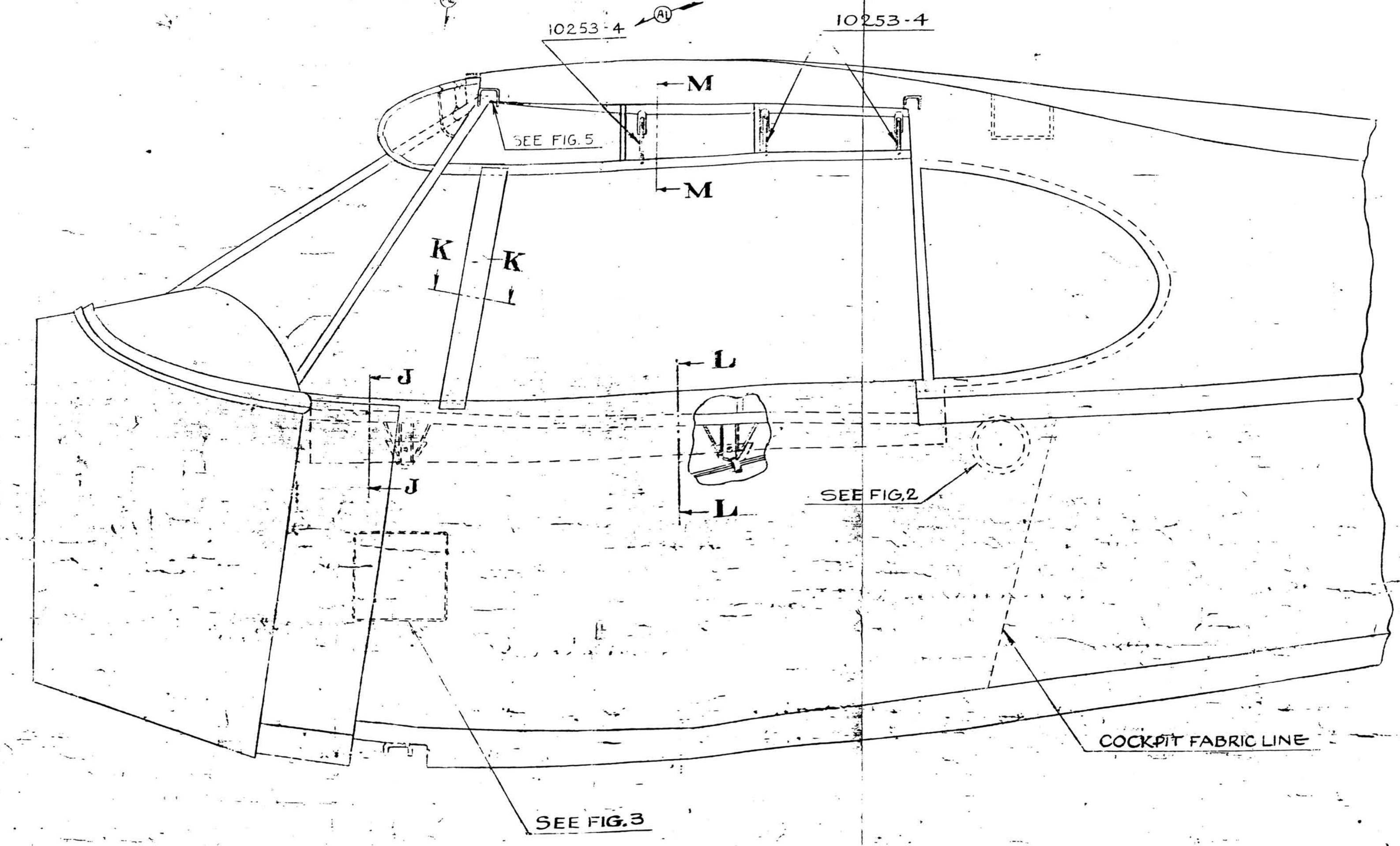
10253-4
10253-4
M
M
SEE FIG. 5
K
K
J
J
L
L
SEE FIG. 2
COCKPIT FABRIC LINE
SEE FIG. 3

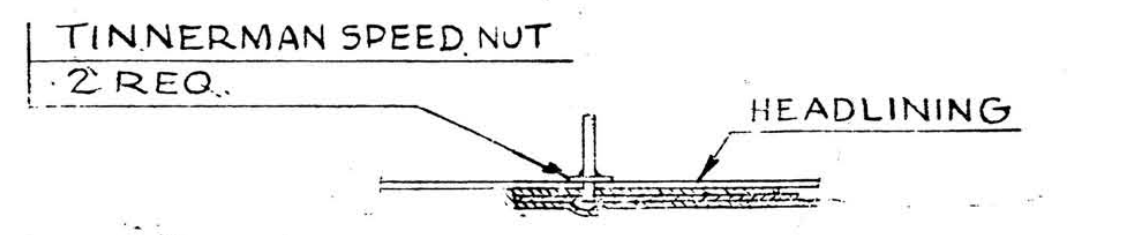
TINNERMAN SPEED NUT
2 REQ.
HEADLINING

FIG. 4
PLATE ATTACHMENT
FULL SIZE

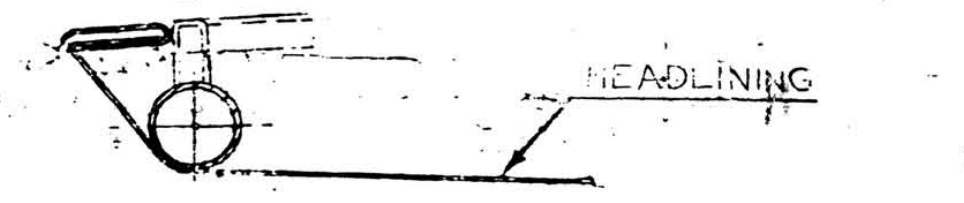
HEADLINING

FIG. 5
6 IN. = 1 FT.

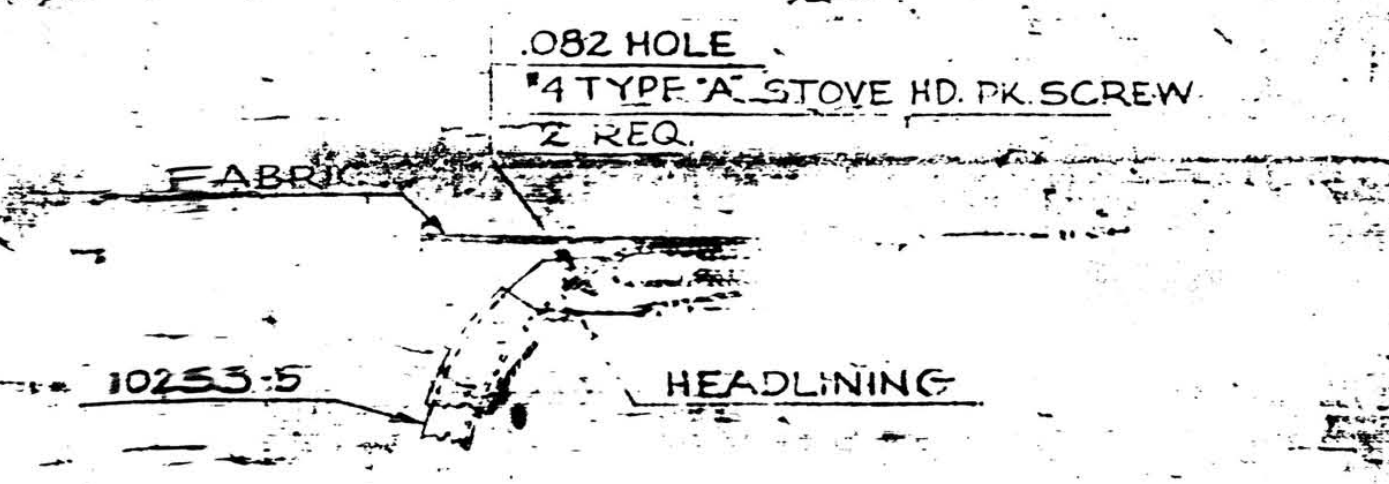
.082 HOLE
#4 TYPE "A" STOVE HD. PK. SCREW
2 REQ.
FABRIC
10253-5
HEADLINING

SECTION A-A
FULL SIZE

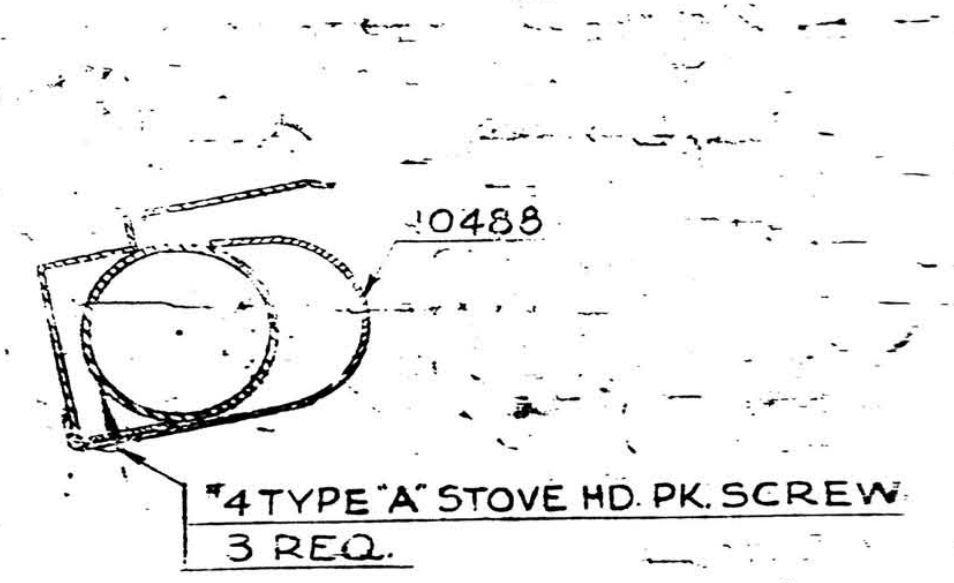
10488
#4 TYPE "A" STOVE HD. PK. SCREW
3 REQ.

SECTION D-D
FULL SIZE

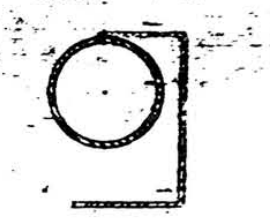

SECTION B-B
FULL SIZE

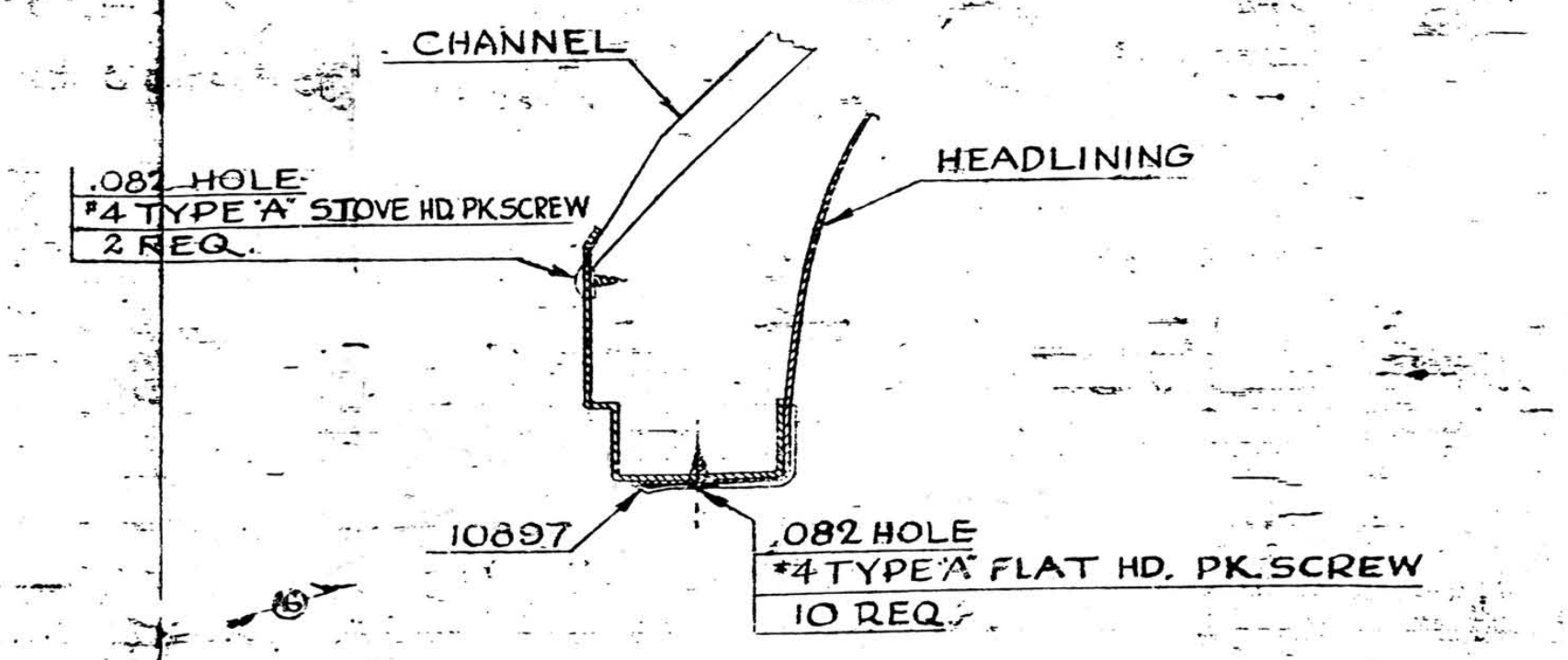
CHANNEL
HEADLINING
.082 HOLE
#4 TYPE "A" STOVE HD. PK. SCREW
2 REQ.
10897
.082 HOLE
#4 TYPE "A" FLAT HD. PK. SCREW
10 REQ.

SECTION E-E
FULL SIZE

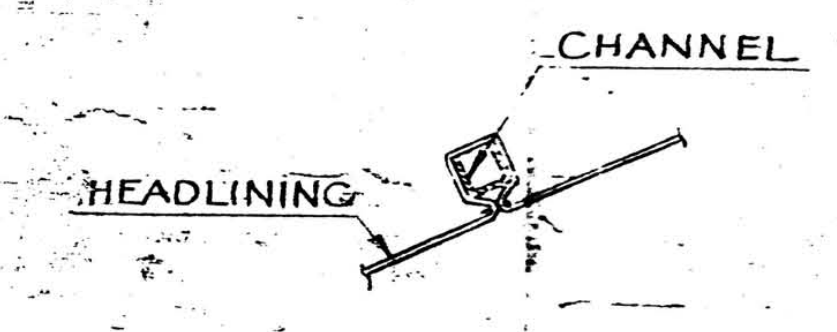
CHANNEL
HEADLINING

SECTION H-H
FULL SIZE

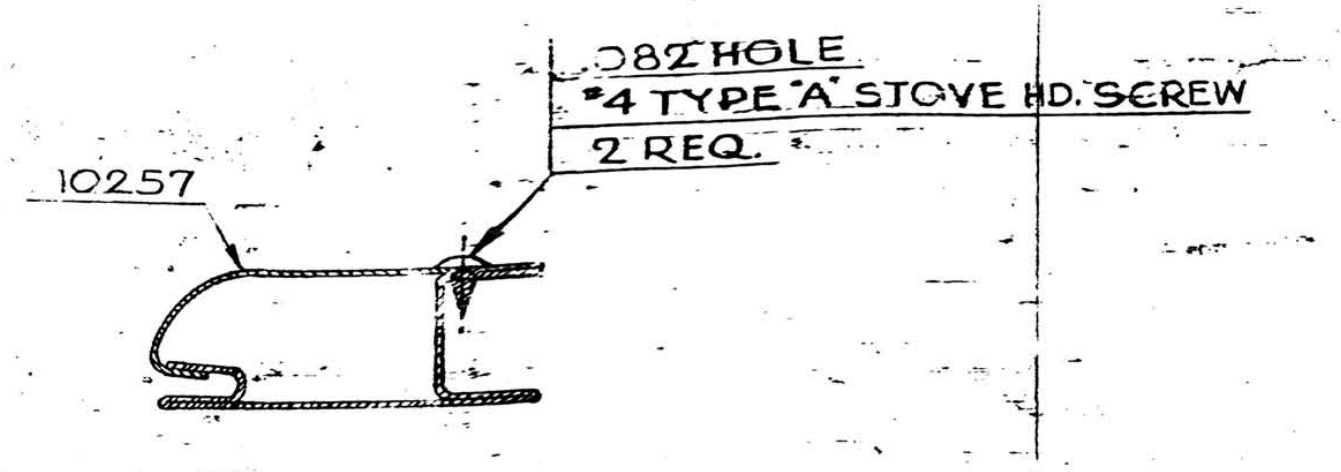
.082 HOLE
#4 TYPE "A" STOVE HD. SCREW
2 REQ.
10257

SECTION K-K
FULL SIZE

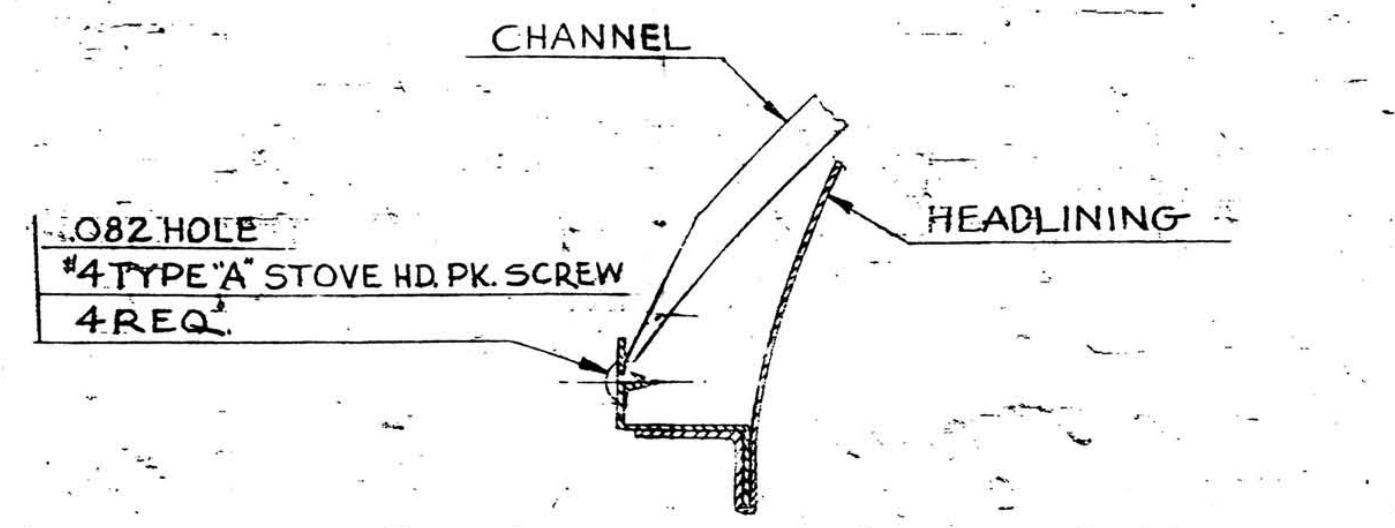
CHANNEL
.082 HOLE
#4 TYPE "A" STOVE HD. PK. SCREW
4 REQ.
HEADLINING

SECTION M-M
FULL SIZE

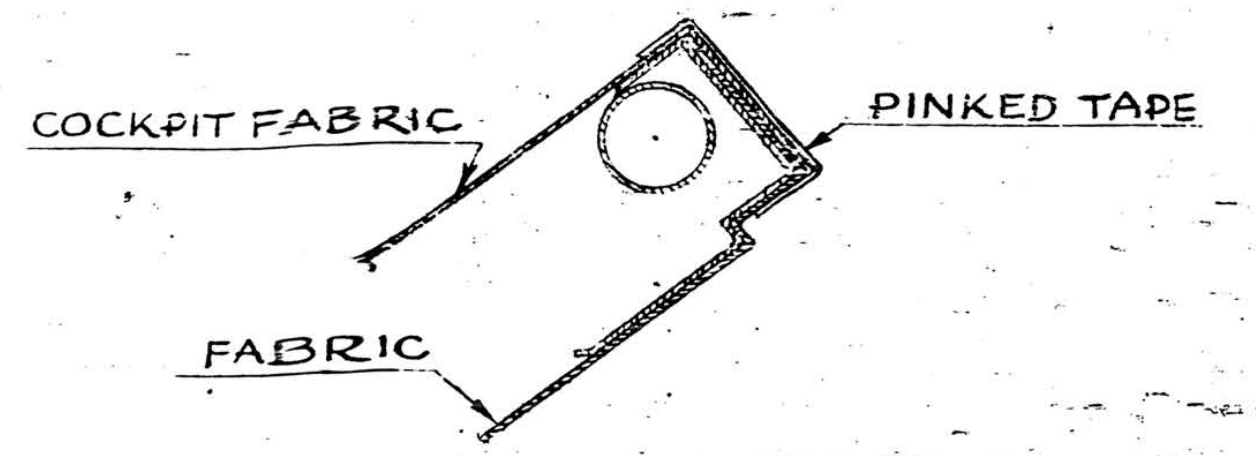
COCKPIT FABRIC
PINKED TAPE
FABRIC

SECTION C-C
FULL SIZE

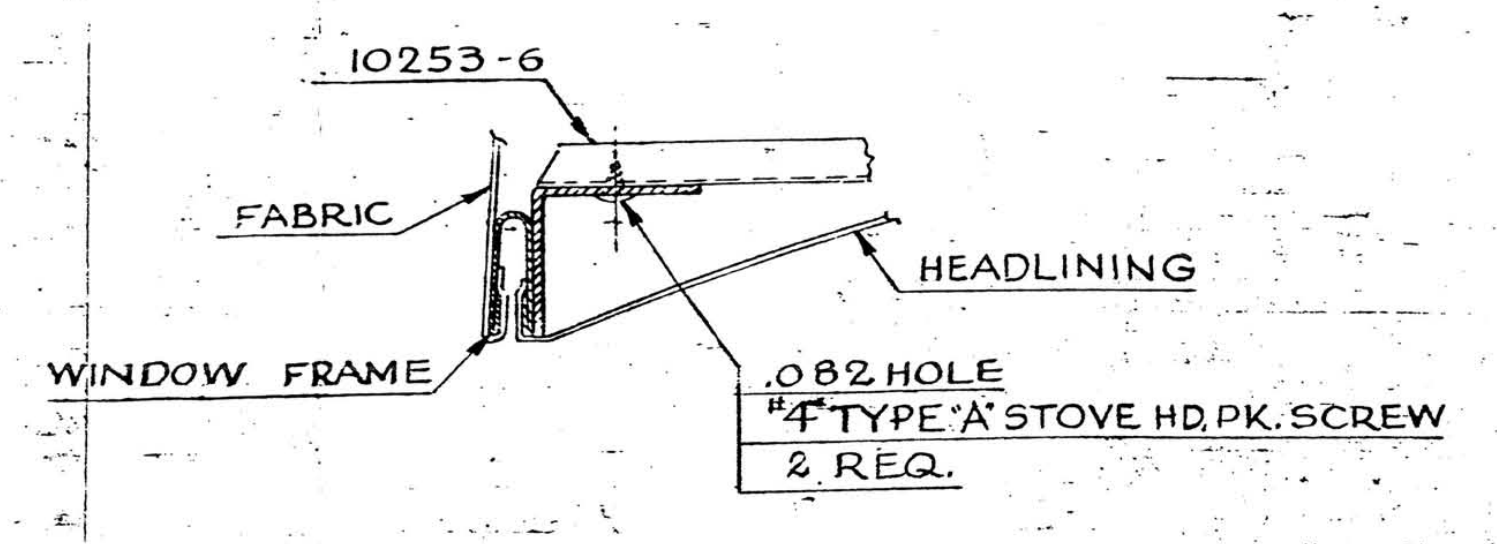
10253-6
FABRIC
HEADLINING
WINDOW FRAME
.082 HOLE
#4 TYPE "A" STOVE HD. PK. SCREW
2 REQ.

SECTION F-F
FULL SIZE

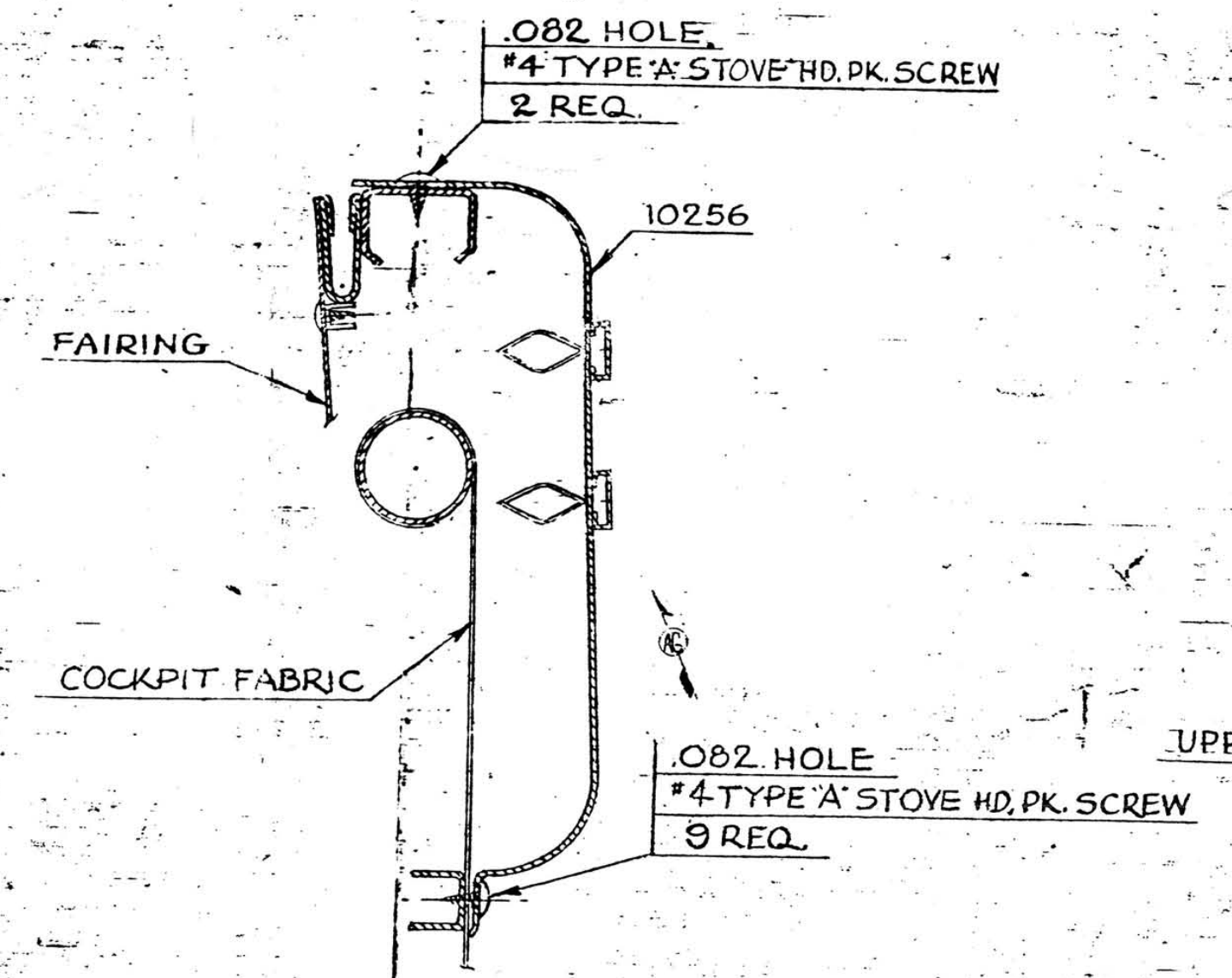
.082 HOLE
#4 TYPE "A" STOVE HD. PK. SCREW
2 REQ.
10256
FAIRING
COCKPIT FABRIC
.082 HOLE
#4 TYPE "A" STOVE HD. PK. SCREW
9 REQ.

SECTION J-J
FULL SIZE

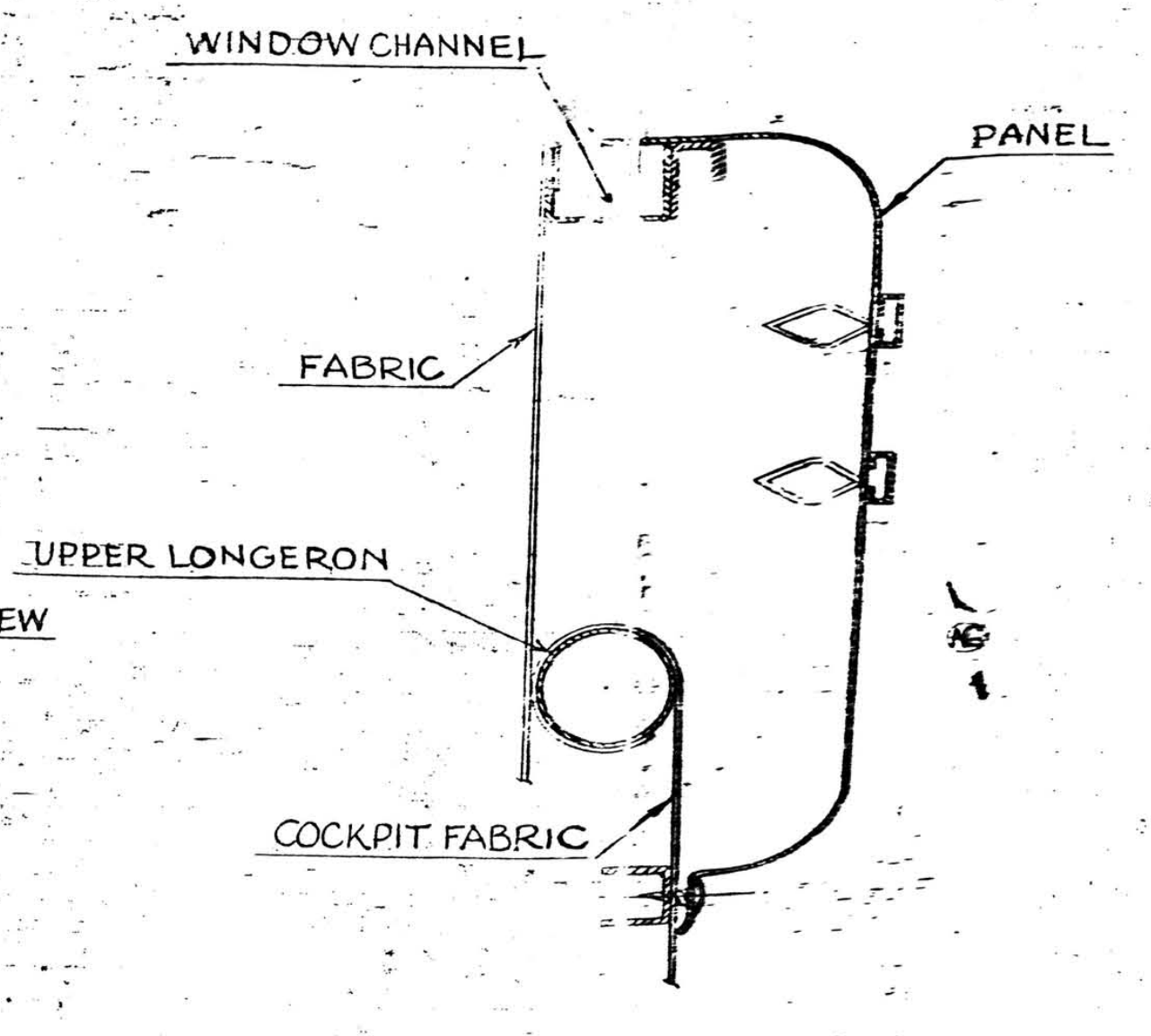
WINDOW CHANNEL
PANEL
FABRIC
UPPER LONGERON
COCKPIT FABRIC

SECTION L-L
FULL SIZE

NOTE:
RUBBER CEMENT USED TO SECURE UPHOLSTERY TO MEMBERS.

PART No.	No. REQ.	SIZE	DESCRIPTION
10904	1		FUEL VALVE PANEL COVER
	2		1597-M-1 TINNERMAN SPEED NUT
#4	41	1/4 L	TYPE "A" STOVE HD. PK. SCREW
#4	10	1/4 L	TYPE "A" FLAT HD. PK. SCREW
10897	1		TRIMSTRIP
10488	1		TRIMSTRIP
10379	2		INSPECTION OPENING COVER
10990	2		REINFORCEMENT ASSY
10262	2		FINISHING PLATE ASSY
10259	1		REAR COCKPIT FAIRING ASSY
10257	1		TRIMSTRIP
10256	1		COCKPIT TRIM PANEL ASSY
10253-6	1		CHANNEL
10253-5	1		CHANNEL
10253-4	3		CHANNEL
10684	1		HEADLINING
		MATERIAL	

"This drawing is the property of the Piper Aircraft Corp. and its possession by unauthorized persons shall not be construed as permission to reproduce for sale, in whole or in part, any devices shown thereon."

LET.	REVISION	DATE	BY
AL	10253-4 WAS 10253-3	5-1-47	HMZ
AK	PLUG BUTTON #48155 REM.	4-25-47	C.L.N.
AJ	NOTE ADDED	4-14-47	HMZ
AH	PLUG BUTTON & FIG. 5 ADDED	3-3-47	C.L.N.
AG	VIEWS OF 10897 & 10256 REV.	2-19-47	B.C.
AF	10990 WAS 10263	1-31-47	L.R.
AE	VIEW REV. 10262 RELOCATED	12-26-46	C.E.K.
AD	10684 WAS 10252; 10253-2 REM.	12-26-46	C.E.K.
AC	REDRAWN & REVISED	[illegible]	[illegible]

MODEL	PER PLANE	NEXT ASSEMBLY	SUPERSEDES	SUP. BY

SCALE 2 IN. = 1 FT. & NOTED | TOTAL WT.–LBS.

FINISH–PIPER SPECIFICATION #10

MANUFACTURING PRACTICES–PIPER SPECIFICATION #9

PIPER AIRCRAFT CORP.
LOCK HAVEN, PENNA.

FINISHING INSTALLATION
COCKPIT

DRAFTSMAN	CHECKER	STANDARDS
C.E.K. 12-24-46	R.D.M. 12-27-46	

10250